Dominic Bumpus Week 3 R Assignment Code Output

```
> # Load Required Libraries

>

> library(rpart)

> library(rpart.plot)

> library(pROC)

>

> # Read data

> hmeq <-
read.csv("C:\\Users\\Wolfh\\Downloads\\HMEQ_Scrubbed\\HMEQ_Scrubbed.csv",
stringsAsFactors = TRUE)

>

> # Structure of the data

> str(hmeq)

'data.frame':	5960 obs. of  29 variables:

 $ TARGET_BAD_FLAG	: int  1 1 1 1 0 1 1 1 1 1 ...

 $ TARGET_LOSS_AMT	: int  641 1109 767 1425 0 335 1841 373 1217 1523 ...

 $ LOAN		: int  1100 1300 1500 1500 1700 1700 1800 1800 2000 2000 ...

 $ IMP_MORTDUE	: num  25860 70053 13500 65000 97800 ...

 $ M_MORTDUE	: int  0 0 0 1 0 0 0 0 0 1 ...

 $ IMP_VALUE	: num  39025 68400 16700 89000 112000 ...

 $ M_VALUE	: int  0 0 0 1 0 0 0 0 0 0 ...

 $ IMP_YOJ	: num  10.5 7 4 7 3 9 5 11 3 16 ...

 $ M_YOJ	: int  0 0 0 1 0 0 0 0 0 0 ...

 $ IMP_DEROG	: int  0 0 0 1 0 0 3 0 0 0 ...

 $ M_DEROG	: int  0 0 0 1 0 0 0 0 0 0 ...

 $ IMP_DELINQ	: int  0 2 0 1 0 0 2 0 2 0 ...

 $ M_DELINQ	: int  0 0 0 1 0 0 0 0 0 0 ...

 $ IMP_CLAGE	: num  94.4 121.8 149.5 174 93.3 ...
```

```
 $ M_CLAGE          : int  0 0 0 1 0 0 0 0 0 0 ...
 $ IMP_NINQ         : int  1 0 1 1 0 1 1 0 1 0 ...
 $ M_NINQ           : int  0 0 0 1 0 0 0 0 0 0 ...
 $ IMP_CLNO         : int  9 14 10 20 14 8 17 8 12 13 ...
 $ M_CLNO           : int  0 0 0 1 0 0 0 0 0 0 ...
 $ IMP_DEBTINC      : num  35 35 35 35 35 ...
 $ M_DEBTINC        : int  1 1 1 1 1 0 1 0 1 1 ...
 $ FLAG.Job.Mgr     : int  0 0 0 0 0 0 0 0 0 0 ...
 $ FLAG.Job.Office  : int  0 0 0 0 1 0 0 0 0 0 ...
 $ FLAG.Job.Other   : int  1 1 1 0 0 1 1 1 1 0 ...
 $ FLAG.Job.ProfExe : int  0 0 0 0 0 0 0 0 0 0 ...
 $ FLAG.Job.Sales   : int  0 0 0 0 0 0 0 0 0 1 ...
 $ FLAG.Job.Self    : int  0 0 0 0 0 0 0 0 0 0 ...
 $ FLAG.Reason.DebtCon: int  0 0 0 0 0 0 0 0 0 0 ...
 $ FLAG.Reason.HomeImp: int  1 1 1 0 1 1 1 1 1 1 ...
>
> # Summary statistics
> summary(hmeq)
 TARGET_BAD_FLAG  TARGET_LOSS_AMT      LOAN       IMP_MORTDUE       M_MORTDUE
IMP_VALUE        M_VALUE          IMP_YOJ          M_YOJ          IMP_DEROG         M_DEROG
IMP_DELINQ
 Min.   :0.0000   Min.   :    0   Min.   : 1100   Min.   :  2063   Min.   :0.00000   Min.   :  8000
Min.   :0.00000   Min.   : 0.000   Min.   :0.00000   Min.   : 0.0000   Min.   :0.0000   Min.   :
0.000
 1st Qu.:0.0000   1st Qu.:    0   1st Qu.:11100   1st Qu.: 48139   1st Qu.:0.00000   1st Qu.:
66490   1st Qu.:0.00000   1st Qu.: 3.000   1st Qu.:0.00000   1st Qu.: 0.0000   1st Qu.:0.0000
1st Qu.: 0.000
 Median :0.0000   Median :    0   Median :16300   Median : 65000   Median :0.00000
Median : 89000   Median :0.00000   Median : 7.000   Median :0.00000   Median : 0.0000
Median :0.0000   Median : 0.000
```

Mean :0.1995 Mean : 2676 Mean :18608 Mean : 72999 Mean :0.08691 Mean :101536 Mean :0.01879 Mean : 8.756 Mean :0.08641 Mean : 0.3431 Mean :0.1188 Mean : 0.503

3rd Qu.:0.0000 3rd Qu.: 0 3rd Qu.:23300 3rd Qu.: 88200 3rd Qu.:0.00000 3rd Qu.:119005 3rd Qu.:0.00000 3rd Qu.:12.000 3rd Qu.:0.00000 3rd Qu.: 0.0000 3rd Qu.:0.0000 3rd Qu.: 1.000

Max. :1.0000 Max. :78987 Max. :89900 Max. :399550 Max. :1.00000 Max. :855909 Max. :1.00000 Max. :41.000 Max. :1.00000 Max. :10.0000 Max. :1.0000 Max. :15.000

M_DELINQ IMP_CLAGE M_CLAGE IMP_NINQ M_NINQ IMP_CLNO M_CLNO IMP_DEBTINC M_DEBTINC FLAG.Job.Mgr FLAG.Job.Office FLAG.Job.Other

Min. :0.00000 Min. : 0.0 Min. :0.00000 Min. : 0.00 Min. :0.00000 Min. : 0.00 Min. :0.00000 Min. : 0.5245 Min. :0.0000 Min. :0.0000 Min. :0.0000 Min. :0.0000

1st Qu.:0.00000 1st Qu.: 117.4 1st Qu.:0.00000 1st Qu.: 0.00 1st Qu.:0.00000 1st Qu.:15.00 1st Qu.:0.00000 1st Qu.: 30.7632 1st Qu.:0.0000 1st Qu.:0.0000 1st Qu.:0.0000 1st Qu.:0.0000

Median :0.00000 Median : 174.0 Median :0.00000 Median : 1.00 Median :0.00000 Median :20.00 Median :0.00000 Median : 35.0000 Median :0.0000 Median :0.0000 Median :0.0000 Median :0.0000

Mean :0.09732 Mean : 179.5 Mean :0.05168 Mean : 1.17 Mean :0.08557 Mean :21.25 Mean :0.03725 Mean : 34.0393 Mean :0.2126 Mean :0.1287 Mean :0.1591 Mean :0.4007

3rd Qu.:0.00000 3rd Qu.: 227.1 3rd Qu.:0.00000 3rd Qu.: 2.00 3rd Qu.:0.00000 3rd Qu.:26.00 3rd Qu.:0.00000 3rd Qu.: 37.9499 3rd Qu.:0.0000 3rd Qu.:0.0000 3rd Qu.:0.0000 3rd Qu.:1.0000

Max. :1.00000 Max. :1168.2 Max. :1.00000 Max. :17.00 Max. :1.00000 Max. :71.00 Max. :1.00000 Max. :203.3121 Max. :1.0000 Max. :1.0000 Max. :1.0000 Max. :1.0000

FLAG.Job.ProfExe FLAG.Job.Sales FLAG.Job.Self FLAG.Reason.DebtCon FLAG.Reason.HomeImp

Min. :0.0000 Min. :0.00000 Min. :0.00000 Min. :0.0000 Min. :0.0000

1st Qu.:0.0000 1st Qu.:0.00000 1st Qu.:0.00000 1st Qu.:0.0000 1st Qu.:0.0000

Median :0.0000 Median :0.00000 Median :0.00000 Median :1.0000 Median :0.0000

```
 Mean   :0.2141   Mean   :0.01829   Mean   :0.03238   Mean   :0.6591      Mean   :0.2987
 3rd Qu.:0.0000   3rd Qu.:0.00000   3rd Qu.:0.00000   3rd Qu.:1.0000      3rd Qu.:1.0000
 Max.   :1.0000   Max.   :1.00000   Max.   :1.00000   Max.   :1.0000      Max.   :1.0000
>
> # First six observations
> head(hmeq)
  TARGET_BAD_FLAG TARGET_LOSS_AMT LOAN IMP_MORTDUE M_MORTDUE IMP_VALUE
M_VALUE IMP_YOJ M_YOJ IMP_DEROG M_DEROG IMP_DELINQ M_DELINQ IMP_CLAGE
M_CLAGE IMP_NINQ M_NINQ IMP_CLNO M_CLNO IMP_DEBTINC M_DEBTINC
FLAG.Job.Mgr
1               1           641 1100      25860        0     39025      0    10.5     0        0      0        0       0
94.36667      0       1      0       9      0    35.00000        1          0
2               1          1109 1300      70053        0     68400      0     7.0     0        0      0        2       0
121.83333      0       0      0      14      0    35.00000        1          0
3               1           767 1500      13500        0     16700      0     4.0     0        0      0        0       0
149.46667      0       1      0      10      0    35.00000        1          0
4               1          1425 1500      65000        1     89000      1     7.0     1        1      1        1       1
174.00000      1       1      1      20      1    35.00000        1          0
5               0             0 1700      97800        0    112000      0     3.0     0        0      0        0       0
93.33333      0       0      0      14      0    35.00000        1          0
6               1           335 1700      30548        0     40320      0     9.0     0        0      0        0       0
101.46600      0       1      0       8      0    37.11361        0          0
  FLAG.Job.Office FLAG.Job.Other FLAG.Job.ProfExe FLAG.Job.Sales FLAG.Job.Self
FLAG.Reason.DebtCon FLAG.Reason.HomeImp
1               0             1             0             0             0                 0                 1
2               0             1             0             0             0                 0                 1
3               0             1             0             0             0                 0                 1
4               0             0             0             0             0                 0                 0
5               1             0             0             0             0                 0                 1
6               0             1             0             0             0                 0                 1
>
```

```
> # Remove TARGET_LOSS_AMT
> class_data <- subset(hmeq, select = -TARGET_LOSS_AMT)
>
> # Gini Index Tree
> tree_gini <- rpart(
+   TARGET_BAD_FLAG ~ .,
+   data = class_data,
+   method = "class",
+   parms = list(split = "gini"),
+   control = rpart.control(cp = 0.01)
+ )
>
> # Entropy (Information Gain) Tree
> tree_entropy <- rpart(
+   TARGET_BAD_FLAG ~ .,
+   data = class_data,
+   method = "class",
+   parms = list(split = "information"),
+   control = rpart.control(cp = 0.01)
+ )
>
> # Plot trees
> rpart.plot(tree_gini, main = "Classification Tree - Gini Index")
> rpart.plot(tree_entropy, main = "Classification Tree - Entropy")
>
> # Important variables
> tree_gini$variable.importance
```

```
  M_DEBTINC IMP_DEBTINC  IMP_DELINQ     M_VALUE   IMP_CLAGE       LOAN   IMP_DEROG
M_DEROG   IMP_VALUE    M_DELINQ      M_NINQ     IMP_YOJ      M_CLNO    IMP_CLNO
IMP_MORTDUE
 570.021010  128.539072   77.371518   51.334486   36.076295   25.645675   22.501563
9.540586    8.551021    7.632469    6.311465    4.323751    4.256569    2.837461    1.621407
> tree_entropy$variable.importance
  M_DEBTINC IMP_DEBTINC  IMP_DELINQ   IMP_CLAGE       LOAN     M_VALUE   IMP_DEROG
IMP_VALUE     IMP_YOJ    IMP_CLNO IMP_MORTDUE
 762.591210  188.922871   68.152477   40.125205   34.053718   30.094365   12.037746
10.263083    3.436136    3.075170    1.219274
>
> # ROC Curves
> prob_gini <- predict(tree_gini, type = "prob")[,2]
> prob_entropy <- predict(tree_entropy, type = "prob")[,2]
>
> roc_gini <- roc(class_data$TARGET_BAD_FLAG, prob_gini)
Setting levels: control = 0, case = 1
Setting direction: controls < cases> roc_entropy <- roc(class_data$TARGET_BAD_FLAG,
prob_entropy)
Setting levels: control = 0, case = 1
Setting direction: controls < cases>
> plot(roc_gini, col = "blue", main = "ROC Curve - Classification Trees")
> lines(roc_entropy, col = "red")
> legend("bottomright",
+       legend = c("Gini", "Entropy"),
+       col = c("blue", "red"),
+       lwd = 2)
>
> # Remove TARGET_BAD_FLAG
> reg_data <- subset(hmeq, select = -TARGET_BAD_FLAG)
```

```
>
> # ANOVA Tree
> tree_anova <- rpart(
+   TARGET_LOSS_AMT ~ .,
+   data = reg_data,
+   method = "anova",
+   control = rpart.control(cp = 0.01)
+ )
>
> # Poisson Tree
> tree_poisson <- rpart(
+   TARGET_LOSS_AMT ~ .,
+   data = reg_data,
+   method = "poisson",
+   control = rpart.control(cp = 0.01)
+ )
>
> # Plot trees
> rpart.plot(tree_anova, main = "Regression Tree - ANOVA")
> rpart.plot(tree_poisson, main = "Regression Tree - Poisson")
>
> # Important variables
> tree_anova$variable.importance
        M_DEBTINC              LOAN       IMP_DEBTINC        IMP_DELINQ         IMP_VALUE
IMP_CLNO       IMP_MORTDUE         IMP_CLAGE           M_VALUE         IMP_DEROG
FLAG.Reason.HomeImp
      64758513590        64443856477        19307937442        18468415581         9985413830
8640006256         7345104792         5561821234         3812596217         3423606021
2487025698
```

```
FLAG.Reason.DebtCon          M_DEROG          M_DELINQ          M_NINQ          IMP_YOJ
M_YOJ     FLAG.Job.Other          M_MORTDUE      FLAG.Job.Self

       2376139202        1695086247        1384320435        1101806061        803802835
727900700         569633461         363950350         269034105

> tree_poisson$variable.importance

        M_DEBTINC        IMP_DEBTINC             LOAN        IMP_DELINQ         IMP_VALUE
M_VALUE        IMP_MORTDUE         IMP_DEROG FLAG.Reason.HomeImp
FLAG.Reason.DebtCon          IMP_CLNO

      18534649.01        6636788.15        5093017.45        1989199.88         765775.84
731438.40         390250.40         292575.36         214334.43         197111.13
82289.11

         IMP_YOJ      FLAG.Job.Self

        24796.57          12398.29

>

> # Predictions

> pred_anova <- predict(tree_anova)

> pred_poisson <- predict(tree_poisson)

>

> # Root Mean Square Error calculation

> rmse_anova <- sqrt(mean((reg_data$TARGET_LOSS_AMT - pred_anova)^2, na.rm = TRUE))

> rmse_poisson <- sqrt(mean((reg_data$TARGET_LOSS_AMT - pred_poisson)^2, na.rm =
TRUE))

>

> rmse_anova

[1] 4848.417

> rmse_poisson

[1] 5558.973

>

>

> # The ANOVA regression tree produces a lower RMSE and
```

```
> # more interpretable splits than the Poisson model.
> # Large losses are driven by higher loan balances,
> # weaker credit profiles, and prior delinquency behavior.
>
> # Probability of Default Tree
> prob_tree <- rpart(
+   TARGET_BAD_FLAG ~ .,
+   data = class_data,
+   method = "class",
+   control = rpart.control(cp = 0.01)
+ )
>
> # Severity Tree (Loss Given Default)
> severity_data <- subset(hmeq, TARGET_BAD_FLAG == 1)
> severity_data <- subset(severity_data, select = -TARGET_BAD_FLAG)
>
> severity_tree <- rpart(
+   TARGET_LOSS_AMT ~ .,
+   data = severity_data,
+   method = "anova",
+   control = rpart.control(cp = 0.01)
+ )
>
> # Plot trees
> rpart.plot(prob_tree, main = "Probability of Default Tree")
> rpart.plot(severity_tree, main = "Severity (Loss Given Default) Tree")
>
> # Important variables
```

```
> prob_tree$variable.importance

  M_DEBTINC IMP_DEBTINC  IMP_DELINQ     M_VALUE   IMP_CLAGE        LOAN   IMP_DEROG
M_DEROG   IMP_VALUE    M_DELINQ      M_NINQ     IMP_YOJ      M_CLNO    IMP_CLNO
IMP_MORTDUE

 570.021010  128.539072   77.371518   51.334486   36.076295   25.645675   22.501563
9.540586    8.551021    7.632469    6.311465    4.323751    4.256569    2.837461    1.621407

> severity_tree$variable.importance

            LOAN          IMP_VALUE        IMP_MORTDUE          IMP_CLNO        IMP_DEBTINC
FLAG.Reason.HomeImp FLAG.Reason.DebtCon           IMP_NINQ         IMP_DELINQ
IMP_CLAGE          M_MORTDUE

       97537912195        16788808741        12468593613        11071238709         8436327252
4166142650         3945210843         2770249169         2167739871         2052513664
1321525422

          IMP_YOJ      FLAG.Job.Other    FLAG.Job.ProfExe           M_CLAGE         IMP_DEROG

         742530790          306916520          175320382          140520186          88840773

>

> # Predictions

> prob_default <- predict(prob_tree, type = "prob")[,2]

> pred_severity <- predict(severity_tree, newdata = hmeq)

>

> # Expected Loss = Probability × Severity

> expected_loss <- prob_default * pred_severity

>

> # Root Mean Square Error for Probability/Severity model

> rmse_ps <- sqrt(mean((hmeq$TARGET_LOSS_AMT - expected_loss)^2, na.rm = TRUE))

> rmse_ps

[1] 4910.95

>

> # The Probability/Severity approach separates default risk

> # from loss magnitude and generally improves performance
```

> # over a single regression model.

> # This method is recommended for credit risk modeling

> # due to better accuracy.

Graphs:

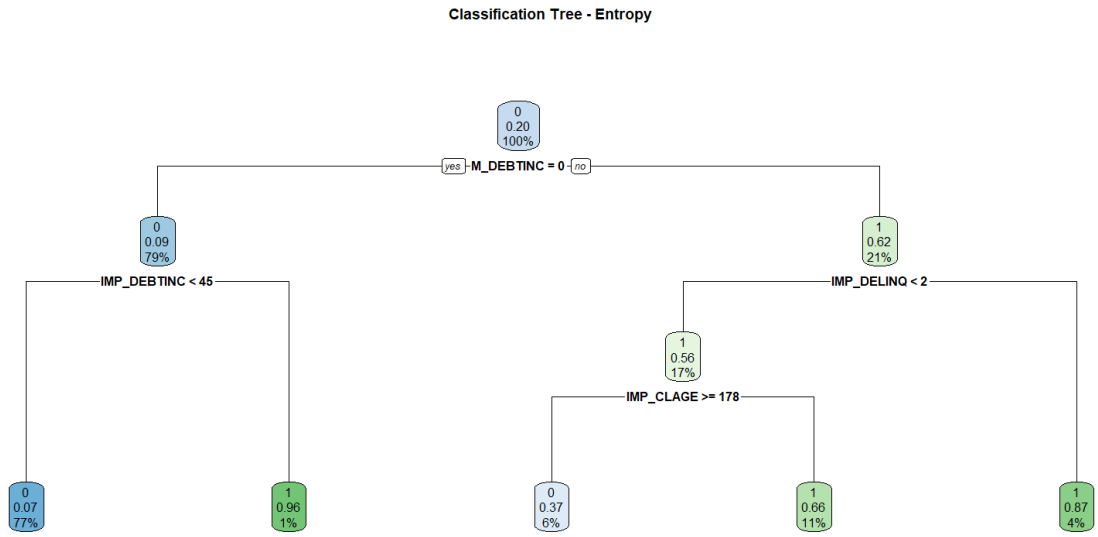

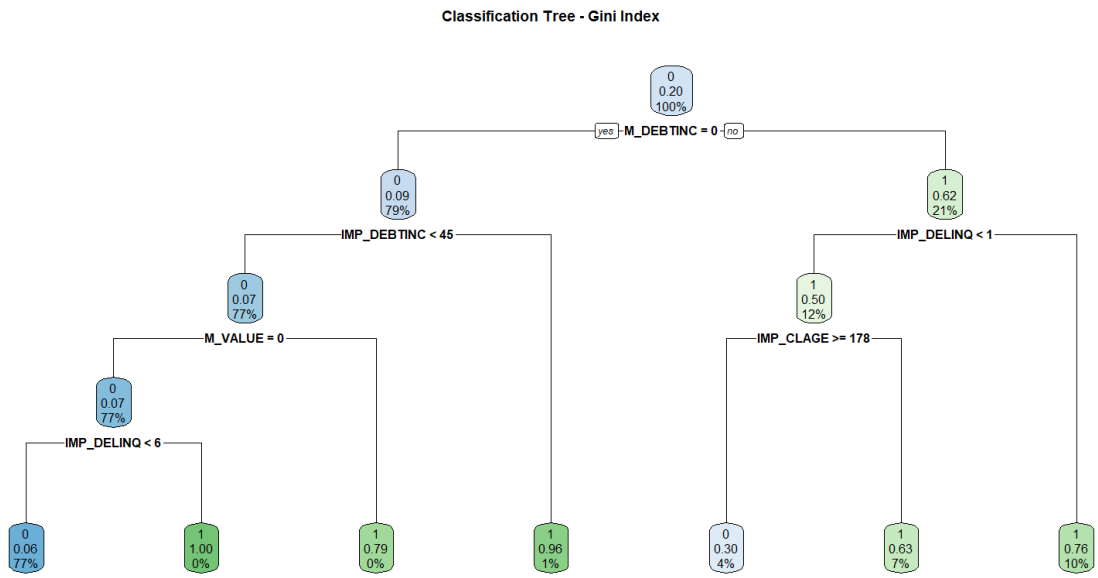

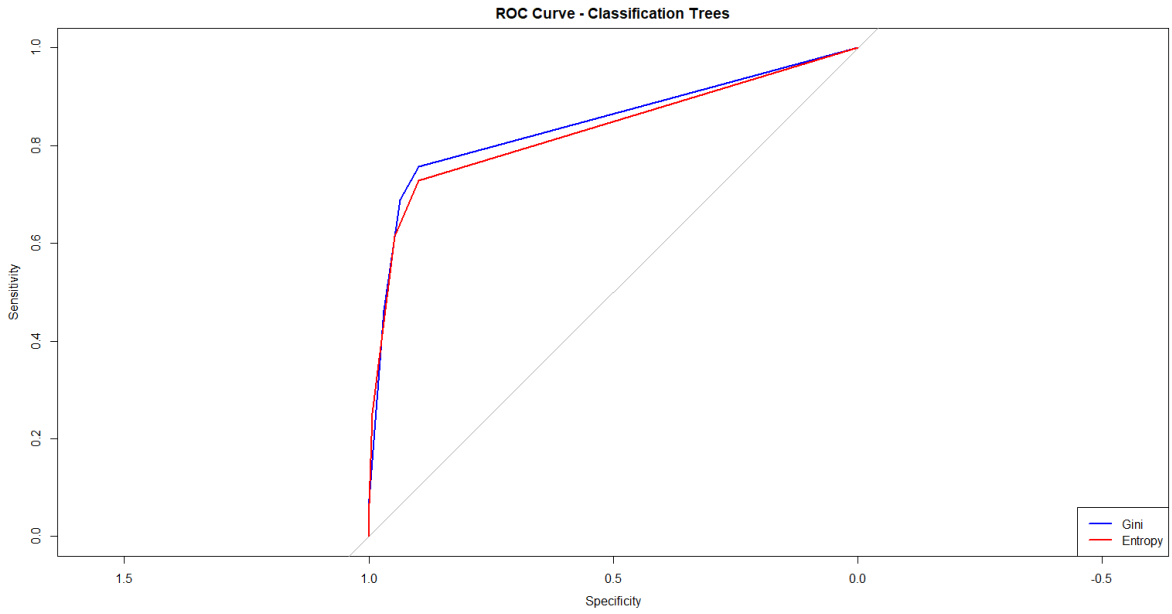
ROC Curve - Classification Trees
Sensitivity
Specificity
Gini
Entropy

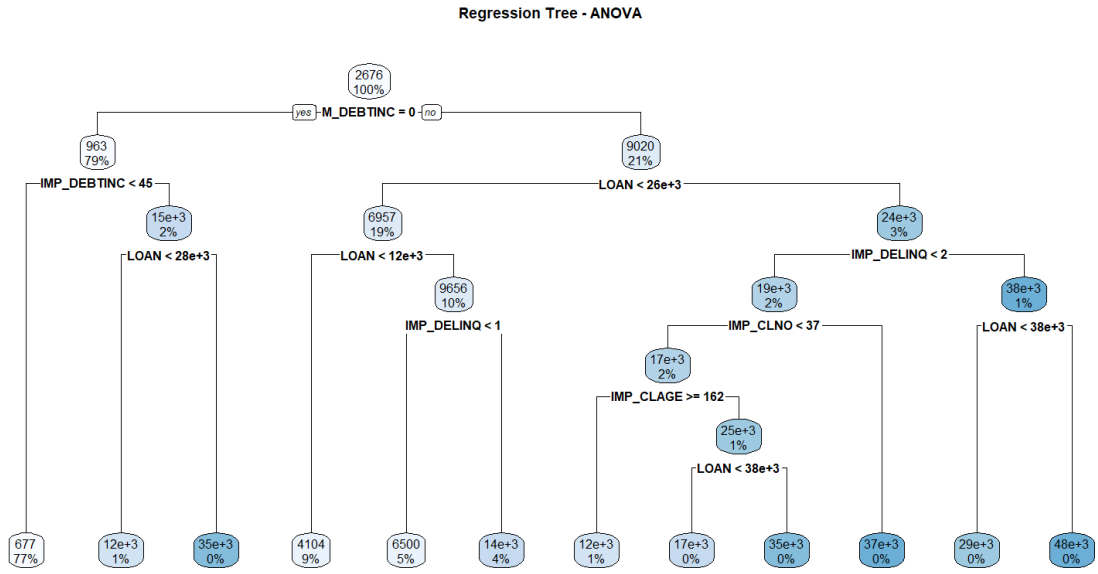
Regression Tree - ANOVA
2676
100%
yes
M_DEBTINC = 0
no
963
79%
9020
21%
IMP_DEBTINC < 45
LOAN < 26e+3
15e+3
2%
6957
19%
24e+3
3%
LOAN < 28e+3
LOAN < 12e+3
IMP_DELINQ < 2
9656
10%
19e+3
2%
38e+3
1%
IMP_DELINQ < 1
IMP_CLNO < 37
LOAN < 38e+3
17e+3
2%
IMP_CLAGE >= 162
25e+3
1%
LOAN < 38e+3
677
77%
12e+3
1%
35e+3
0%
4104
9%
6500
5%
14e+3
4%
12e+3
1%
17e+3
0%
35e+3
0%
37e+3
0%
29e+3
0%
48e+3
0%

Regression Tree - Poisson

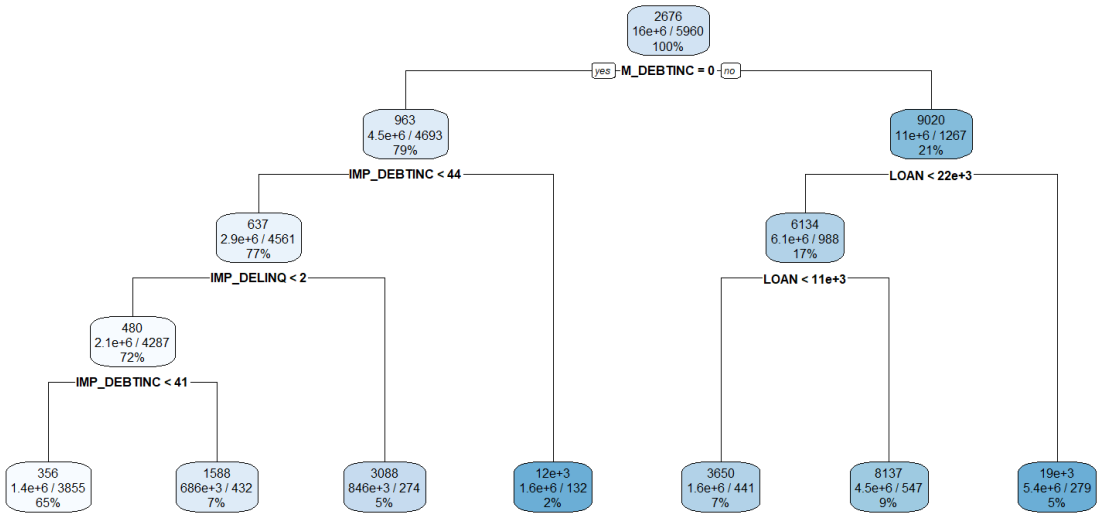

Probability of Default Tree

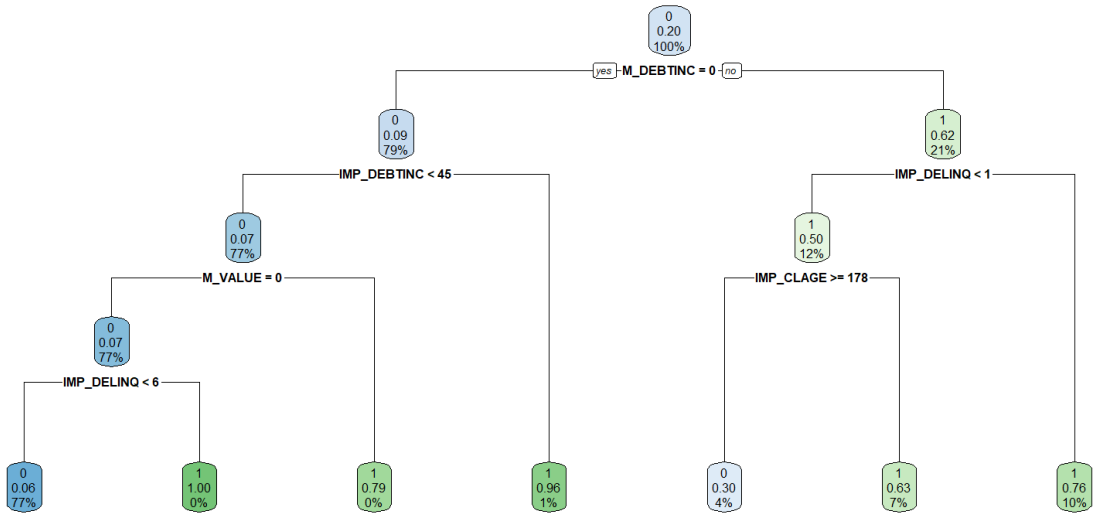
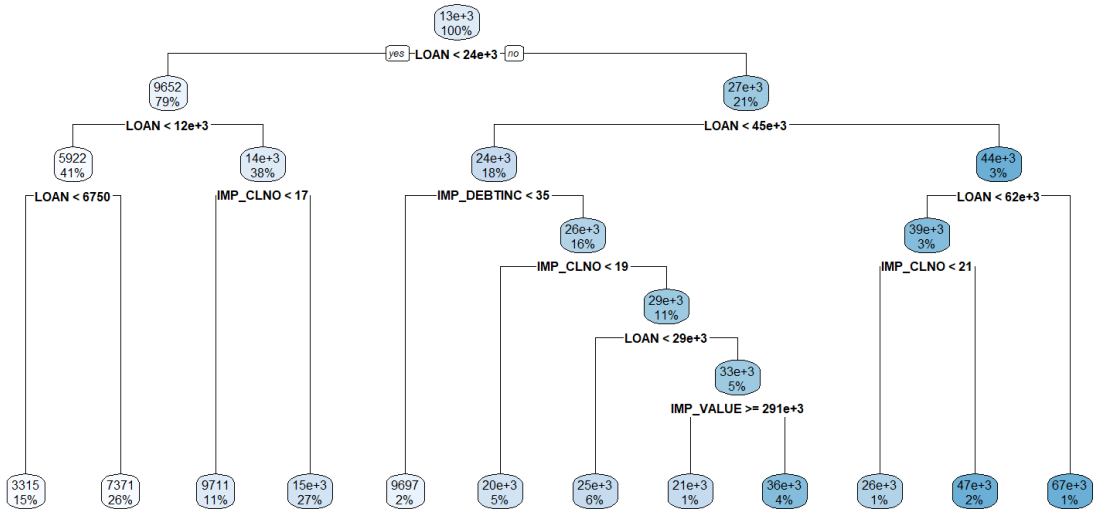
Severity (Loss Given Default) Tree